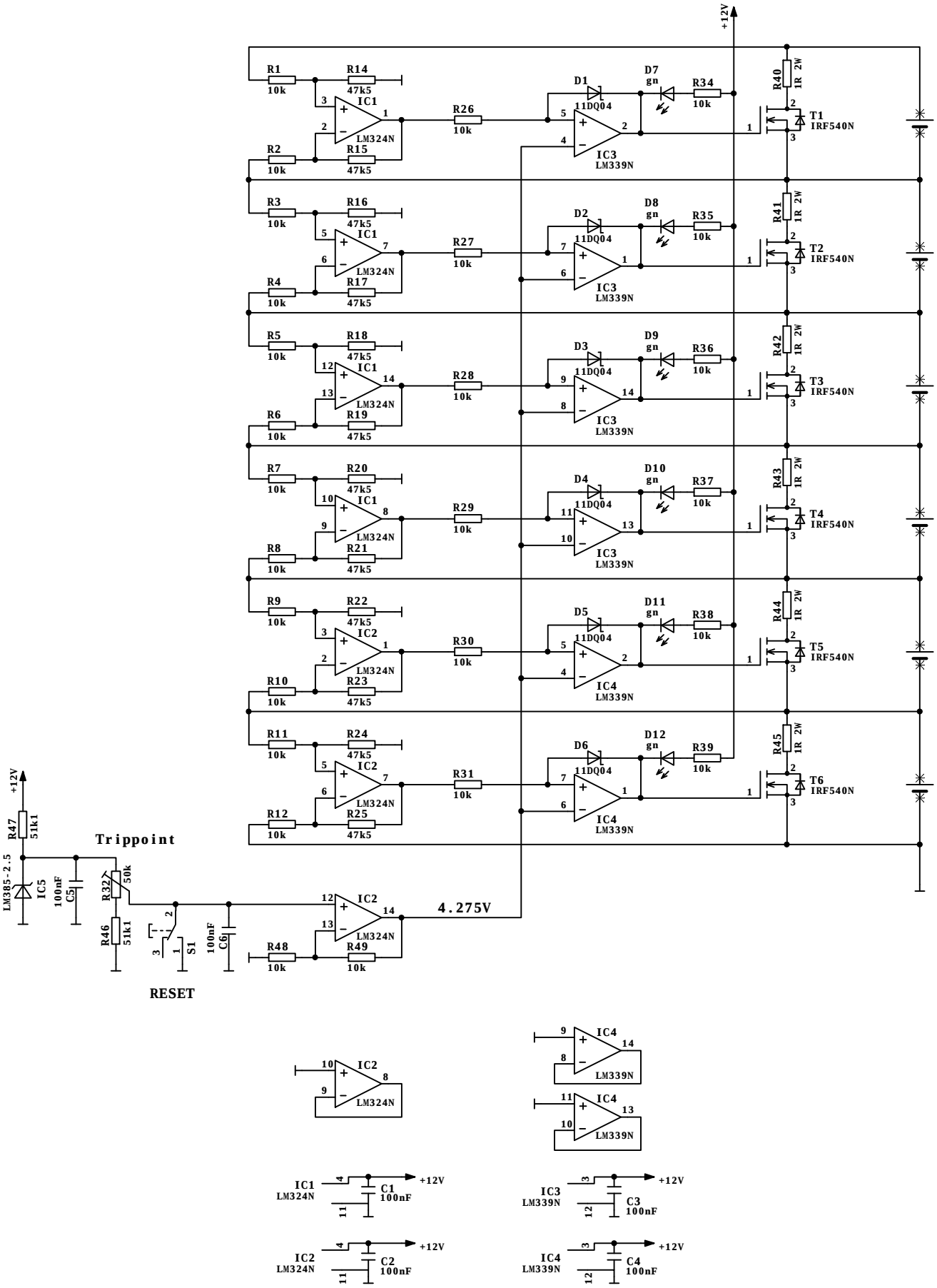
+12V
R1 10k
R2 10k
R3 10k
R4 10k
R5 10k
R6 10k
R7 10k
R8 10k
R9 10k
R10 10k
R11 10k
R12 10k
R14 47k5
R15 47k5
R16 47k5
R17 47k5
R18 47k5
R19 47k5
R20 47k5
R21 47k5
R22 47k5
R23 47k5
R24 47k5
R25 47k5
IC1 LM324N
IC2 LM324N
IC3 LM339N
IC4 LM339N
R26 10k
R27 10k
R28 10k
R29 10k
R30 10k
R31 10k
D1 11DQ04
D2 11DQ04
D3 11DQ04
D4 11DQ04
D5 11DQ04
D6 11DQ04
D7 gn
D8 gn
D9 gn
D10 gn
D11 gn
D12 gn
R34 10k
R35 10k
R36 10k
R37 10k
R38 10k
R39 10k
R40 1R 2W
R41 1R 2W
R42 1R 2W
R43 1R 2W
R44 1R 2W
R45 1R 2W
T1 IRF540N
T2 IRF540N
T3 IRF540N
T4 IRF540N
T5 IRF540N
T6 IRF540N
R47 51k1
LM385-2.5
IC5
100nF C5
Trippoint
R32 50k
R46 51k1
S1
100nF C6
R48 10k
R49 10k
4.275V
RESET
C1 100nF
C2 100nF
C3 100nF
C4 100nF